Development of a Self-Contained Power Management System

R. Jeyagopi[1*], C.K. Chan[1], M.I.N Ma'arof[1]
[1]Faculty of Engineering and Quantity Surveying, INTI International University, Persiaran Perdana BBN, Putra Nilai, Negeri Sembilan, Malaysia.

***Email:** jeyag.raman@newinti.edu.my

***Received**:15 October 2021; **Accepted**:5 January 2022; **Published**:7 January 2022*

Abstract: The power management system has become an important issue to industries and consumers with the growth of electrical and electronic modern equipment such as house appliances. Power sources increased tremendously with the recently fast-growing population, elevated energy demand volume, and depletion of fossil fuels are aimed at finding an alternative source of energy in the power industry. An abundant source of renewable energy such as solar energy has been shown to be a better choice to satisfy this challenge. Thus, solar energy applications should be advanced using solar panels in this research. The power management system is implemented using solar energy, charging circuit, Lead-Acid battery, and Lithium-Manganese Dioxide battery. This power management system has been developed with the interaction of charging circuits from solar panels to batteries. In this paper, the design was carried out on the solar cells testing with different temperatures to accustom the product. This process is to find the maximum output which the solar panels can deliver. It also includes the part of the battery charging circuit that utilizes the time for charging and recharging the battery. The proposed design is compared with the power system in terms of charging time and reliability of the power source. The results show that the proposed design power management system is able to provide a highly reliable source of power.

Keywords: Solar panel; Lead-Acid battery; Lithium-Manganese Dioxide battery

Introduction

World demand for energy is projected to more than double by 2050 and to more than triple by the end of the century. Incremental improvements in existing energy networks will not be adequate to supply this demand in a sustainable way (Abouadane et al., 2019). Finding sufficient supplies of clean energy for the future is one of society's most daunting challenges (Boxwell, 2021). Therefore, solar energy is a subject more widely discussed than any other, as we earthling head for the year 2000. The main benefit of solar energy is an unlimited source of energy which is available at no cost, pollution-free, and available everywhere (Husain et al., 2018). Solar energy is the electromagnetic radiation produced by the sun and radiated over 93,000,000 miles, at speed of 185,960 miles per second to all of us on earth (Hosenuzzaman et al., 2015). The efficiency of solar cells is determined by three physical factors and three main engineering factors (Kabir et al., 2018, Khatib et al., 2021). Sunlight whose energy is higher than the energy gap can donate only energy equal to the energy gap and the rest is dissipated. The voltage output is only two-thirds or so of the energy gap, with again a dissipation of the excess energy (Sumathi et al., 2017).

Copyright: © 2022. All the authors listed in this paper. The distribution, reproduction, and any other usage of the content of this paper is permitted, with credit given to all the author(s) and copyright owner(s) in accordance to common academic practice. This article is an open access article distributed under the terms and conditions of the Creative Commons Attribution (CC BY) license, as stated in the website: https://creativecommons.org/licenses/by/4.0/

The battery has been used as a charging module to store the power. The combined metals such as copper, brass, or silver are as positive electrodes with tin or zinc as the opposite negative electrodes in simple salt electrodes (Zhang et al., 2017). The lithium anode battery systems evolved in the 1970s because of the need for longer shelf life in heart pacers and other electronic devices that did not require high currents. Further improvement of battery technology is expected and this will be assisted by increasing availability of new materials for cases, electrode structures, and active materials (Keil & Jossen, 2016). The battery used is Lead-Acid and Lithium-Manganese Dioxide batteries.

In this paper, the design was carried out on the solar cells testing with different climates and temperatures to accustom the product. This process is to find the maximum output which the solar panels can deliver. It also includes the part of the battery charging circuit that utilizes the time for charging and recharging the battery. The proposed design is compared with the power system in terms of charging time and reliability of the power source. The result shows that the proposed design power management system is able to provide a highly reliable source of power.

Methodology

Figure 1 shows the system structure of the developed power management system. In this study, solar panels, battery cells, comparator devices, and other electronic components were used to interact with each other. By converting solar energy into electrical energy, the output is powered by solar energy and stored in the Lead-Acid battery through a charging module. Solar cells have been used for a considerable time as the power source for spacecraft and it was indeed the intense development of this technology that has made possible the rapid advances in photovoltaic technology. The photovoltaic effect is the creation of voltage by the action of light. Three factors determine the maximum possible efficiency. The three engineering factors of reflectance, series resistance, and recombination reduce the efficiency of actual cells below maximum. The design and charging module is separated into two main circuits that are 12V and 6V circuits.

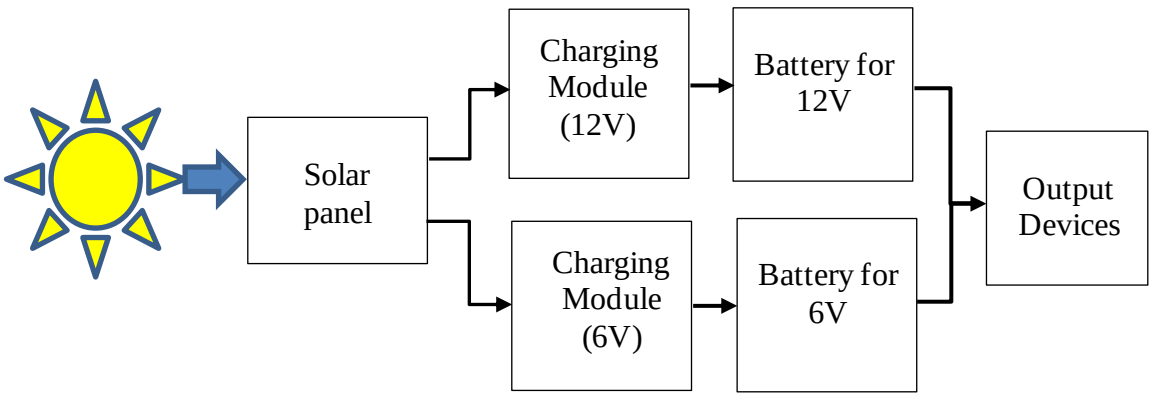


Figure 1. Structure of power system

Proposed Design

Figures 2 (a) and 2 (b) show the power management system for 12V and 6V respectively. The power for the circuit is from solar cells and charged to battery modules. The ideal condition solar panel is capable of producing approximately 19V and 300mA, respectively. The highest voltage is produced when is unloaded. As the loading is increased, the voltage drops, and eventually, the panel output current saturates at a level dependent upon the sunlight intensity. The diode which is placed between the solar panel and the circuit is to prevent the battery from discharge and protect the circuit from over current. The circuit can be separated into different parts, such as an integrator circuit using an LM324 comparator to compare output voltage from the voltage divider with the reference voltage, transistor as a switch, LED as an indicator, Zener diode parallel with 500Ω resistors to provide a reference voltage (3V), and voltage divider. The transistor circuit is ON when the comparator voltage less than 8.47V while the battery is charging. The transistor was automatically OFF when the battery is fully charged while the Led lights up. For both circuits, all the components are similar except the voltage divider resistors and the same principle is applied.

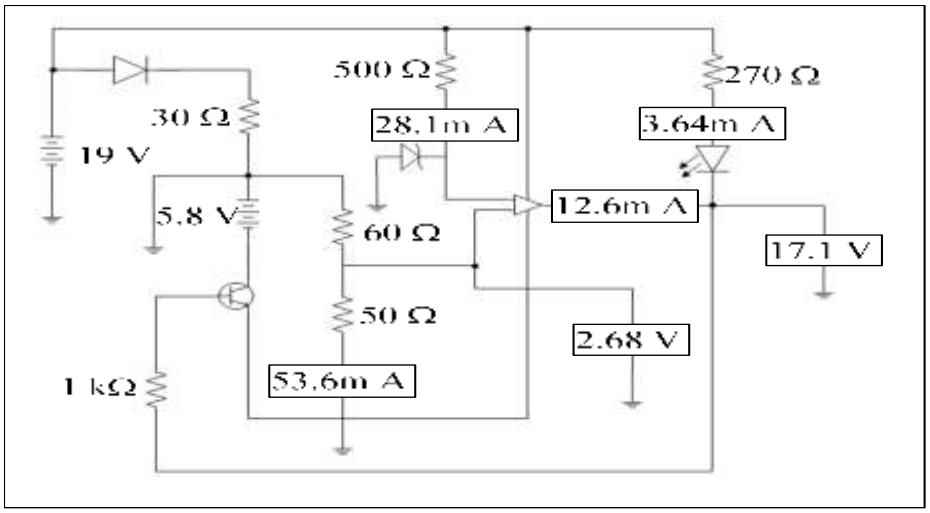


Figure 2 (a). 6V battery charging circuit diagram

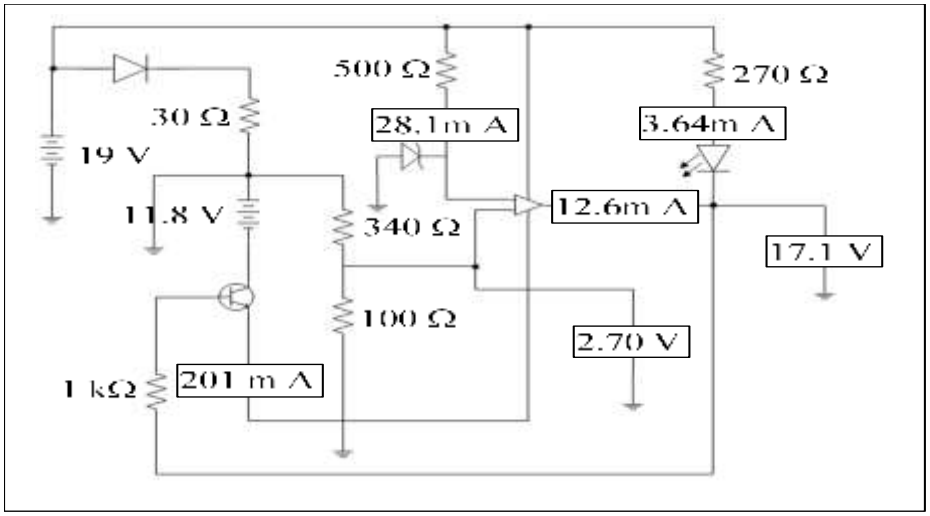


Figure 2 (b). 12V battery charging circuit diagram

Result and Discussion

- **Solar Panel**

The input voltage and current measured from the solar panel against different temperature intervals are shown in Figure 3. The measured solar panel output voltage and current at the highest temperature of 36°C are 19.23V and 0.81A and at the lowest temperature of 20°C is 10.55V and 0.21A for two different situations. Figure 4 shows that the potential voltage and current decrease linearly with temperature, which is 36°C to 20°C. Then, it experienced a continued decrease of voltage and current from 18.89V- 10.55V and 0.81A-0.21A. Thus, the percentage difference of voltage and current decrease with temperature is 8.68% and 60% respectively. However, this measured voltage and current will decrease or increase depending on the weather condition as well.

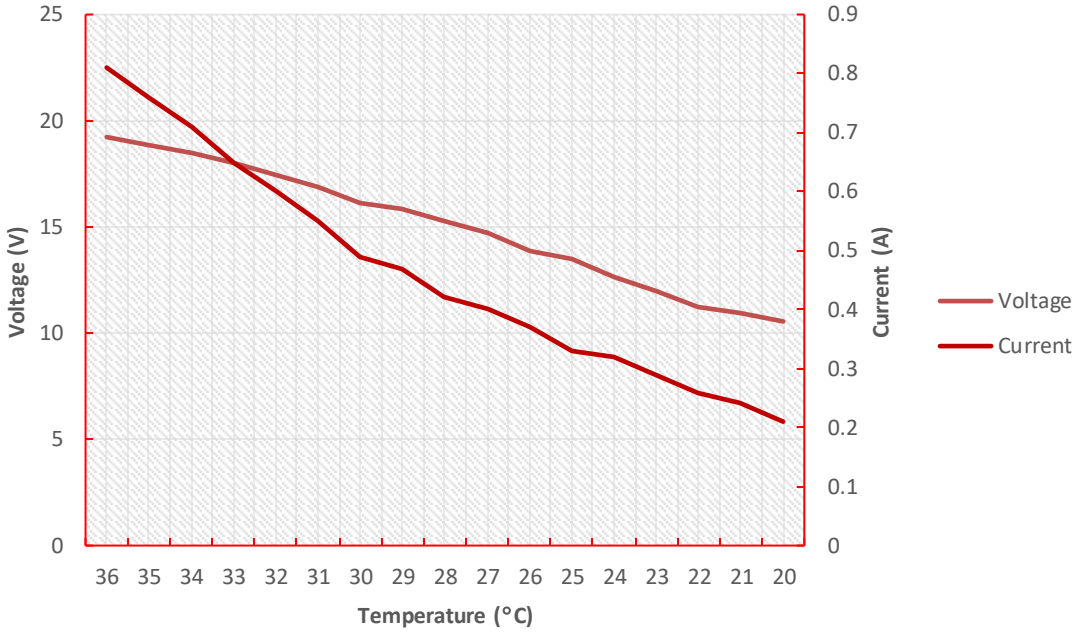


Figure 3. Solar panel test

- **Battery**

A comprehensive range of rechargeable batteries is available in addition to the alkaline primary cells. The main study of the batteries in this research is to investigate the discharge time from solar cells to the endpoint voltage. The lead-acid and lithium manganese dioxide cells are used in this study. Based on studies, these two batteries discharging time is longer, and charging time will be faster. The main factors of the lead-acid battery, which have proved power capability, longer-lasting, smaller and lighter, durable, and generally reduces the leakage of electrolyte. The lithium manganese dioxide batteries use MnO_2 as the active cathode material. Thus, this battery has a high discharge voltage, twice of conventional dry cell batteries. The benefits lithium manganese dioxide batteries are capable of maintaining stable voltage levels throughout long periods of discharge and low tendency of self-discharge.

- **Lead Acid Battery for 12V**

Figure 4 shows the discharging lead-acid battery against time for voltage and current with different time intervals. The measured discharging voltage and current at highest is 11.61V and 0.88A and at lowest is 1.45V and 0.12A for different time intervals at the initial and final time. In addition, Figure 4 exhibits that the time taken to discharge to the lowest voltage and current had been 1.45V and 0.13A, of which at 90 minutes. Meanwhile, the percentage of the voltage and the current reduced rapidly with time below 30 minutes is 73.5%, hence, it is due to the initial voltage and current or power absorbed to the load. Then, it experienced a slower decline from 35 to 90 minutes before finally discharging to the lowest voltage and current. The discharge of lead-acid battery experienced a continued steady decrease of voltage and current from 2.63V to 0.23V and 0.88A to 0.12A with time increases. However, this measured voltage and current will decrease when the load is connected to the circuit.

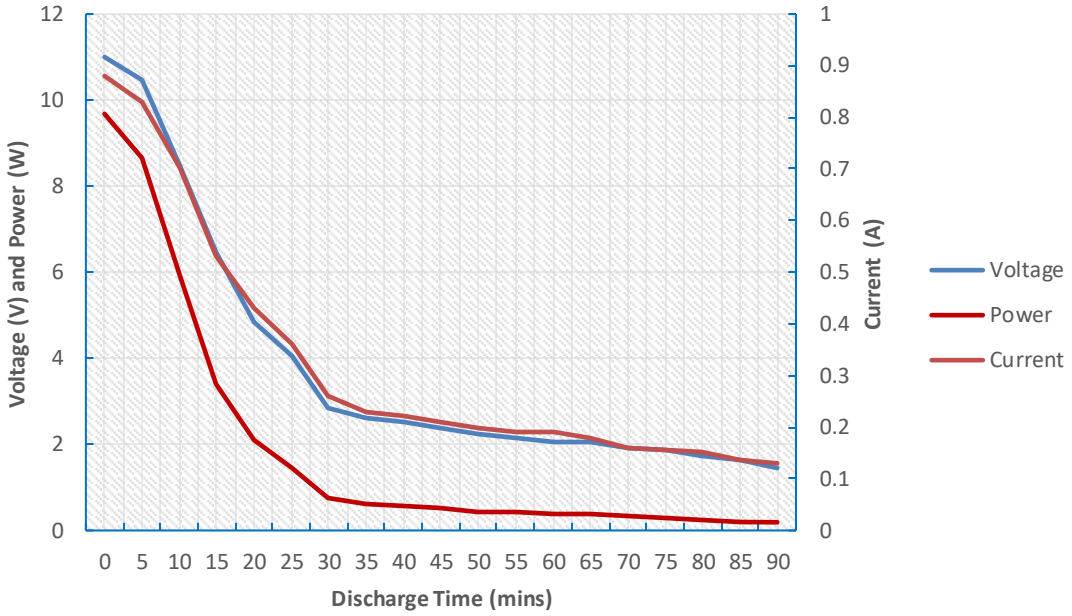


Figure 4. Discharge of Lead Acid Battery

- **Lithium-Manganese Dioxide Battery for 6V**

The discharging lithium-manganese dioxide battery against time for voltage and current with different time intervals is shown in Figure 5. The measured discharging voltage and current at highest is 5.51V and 0.83A and at lowest is 0.18V and 0.07A for different time intervals at the initial and final time. Figure 5 exhibits that the time taken to discharge to the lowest voltage and current had been 0.18V and 0.07A, of which at 84 minutes. Meanwhile, the percentage of the voltage and the current reduced rapidly with time below 45 minutes is 73.5%, hence, it is due to the initial voltage and current or power absorbed to the load. However, it had been noted the current increased from 0.62 to 0.92 of the time range from 45 - 51 minutes, is caused by the change of load. Then, the value of current reduced rapidly from0.92A to 0.28A of the time at 51 minutes. Then, it experienced a slower decline from 51 to 90 minutes before finally discharging to the lowest voltage and current. The discharge of lithium-manganese dioxide battery experienced a continued steady decrease of voltage and current from 0.72V to 0.18V and 0.28A to 0.07A when time increases. However, this measured voltage and current will decrease when the load is connected to the circuit.

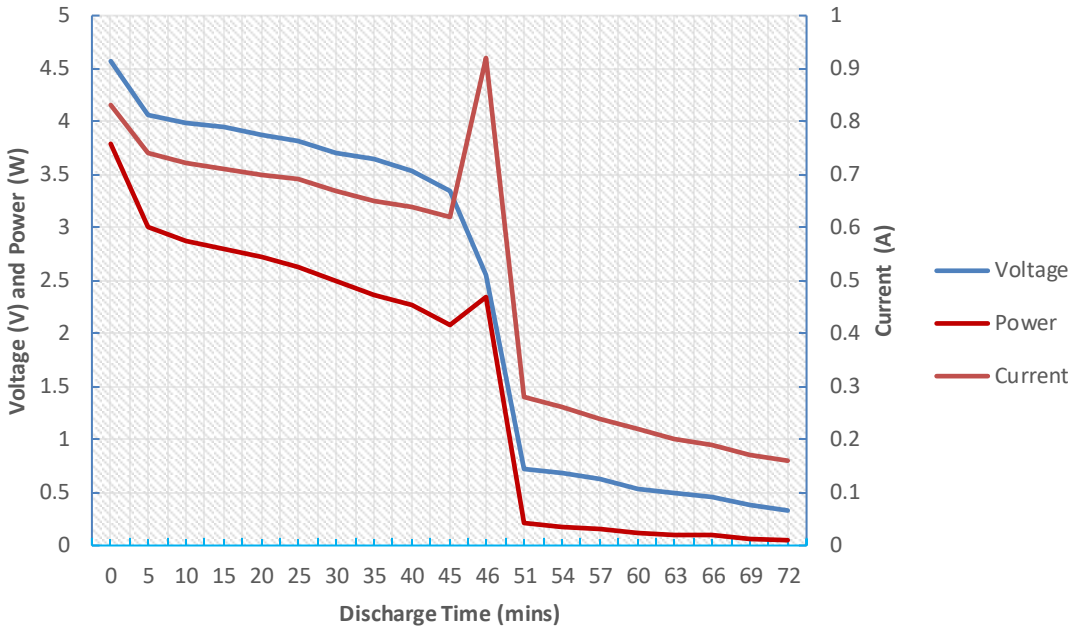


Figure 5. Discharge of Manganese Dioxide Battery

Conclusion

In this study, a comprehensive power management system has successfully developed a circuit to charge a Lead-Acid battery and Lithium-Manganese Dioxide battery using solar panels. Three main tasks or stages were performed i.e. investigated voltage and current for solar panels with different temperatures, designed charging circuit for battery, and investigated voltage and current for batteries charging against time. The solar panel has been used as the power source system for the circuit and tested with different temperatures. The output voltage and current seem to be reducing as the temperature drops. Two different batteries are used as charging devices. The charging circuit was developed as a part of batteries charges. The commissioning of the power management system can improve its effective operation, reliability, and charging time. Thus, the results show that the proposed design power management system is able to provide a highly reliable source of power.

Acknowledgements

We would like to thank INTI International University, Malaysia for supports in the research.

References

Abouadane, H., Fakkar, A., & Oukarfi, B. (2019). Optimal command for photovoltaic systems in real outdoor weather conditions. Journal of Solar Energy Engineering, 142(1), 011003. https://doi.org/10.1115/1.4045249

Boxwell, M. (2021). The solar electricity handbook – 2021 edition: A simple, practical guide to solar energy – designing and installing solar photovoltaic systems. Greenstream Publishing.

Hosenuzzaman, M., Rahim, N. A., Selvaraj, J., Hasanuzzaman, M., Malek, A. B. M. A., & Nahar, A. (2015). Global prospects, progress, policies, and environmental impact of solar photovoltaic power generation. Renewable and Sustainable Energy Reviews, 41, 284–297. https://doi.org/10.1016/j.rser.2014.08.046

Husain, A. A. F., Hasan, W. Z. W., Shafie, S., Hamidon, M. N., & Pandey, S. S. (2018). A review of transparent solar photovoltaic technologies. Renewable and Sustainable Energy Reviews, 94, 779–791. https://doi.org/10.1016/j.rser.2018.06.039

Kabir, E., Kumar, P., Kumar, S., Adelodun, A. A., & Kim, K.-H. (2018). Solar energy: Potential and future prospects. Renewable and Sustainable Energy Reviews, 82, 894–900. https://doi.org/10.1016/j.rser.2017.09.094

Keil, P., & Jossen, A. (2016). Calendar aging of NCA lithium-ion batteries investigated by differential voltage analysis and coulomb tracking. Journal of The Electrochemical Society, 164(1), A6066–A6074. https://doi.org/10.1149/2.1441701jes

Khatib, T., Direya, R., & Said, A. (2021). An improved method for extracting photovoltaic module I–V characteristic curve using hybrid learning machine system. Journal of Solar Energy Engineering, 143(5), 051006. https://doi.org/10.1115/1.4050771

Sumathi, V., Jayapragash, R., Bakshi, A., & Kumar Akella, P. (2017). Solar tracking methods to maximize PV system output – A review of the methods adopted in recent decade. Renewable and Sustainable Energy Reviews, 74, 130–138. https://doi.org/10.1016/j.rser.2017.02.013

Zhang, N., Cheng, F., Liu, J., Wang, L., Long, X., Liu, X., ... Chen, J. (2017). Rechargeable aqueous zinc-manganese dioxide batteries with high energy and power densities. Nature Communications, 8, 405. https://doi.org/10.1038/s41467-017-00467-x